Bottom View 1 : 10

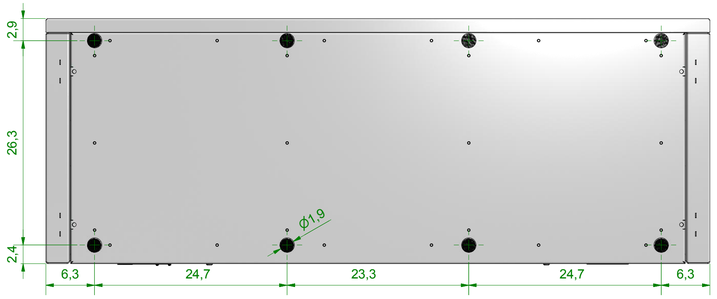

Righthand View 1 : 10

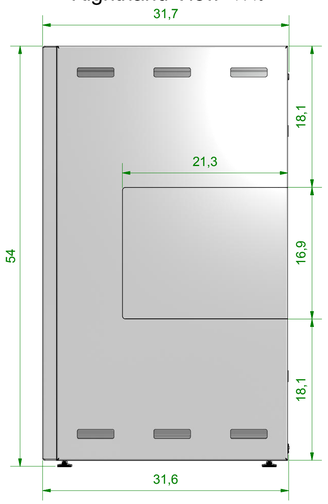

Front View 1 : 10

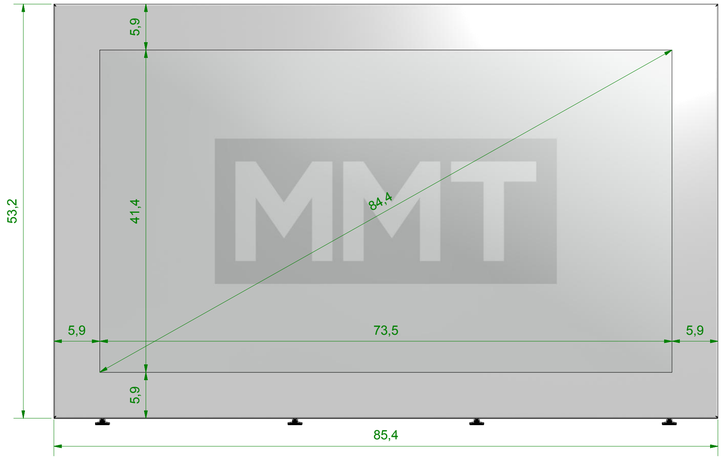

Lefthand View 1 : 10

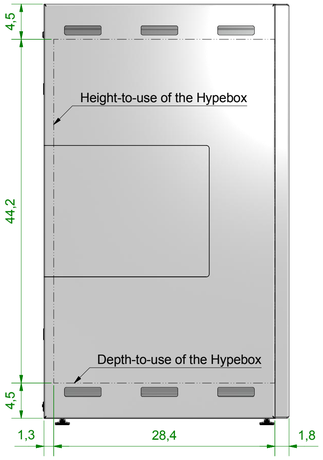

Back View 1 : 10

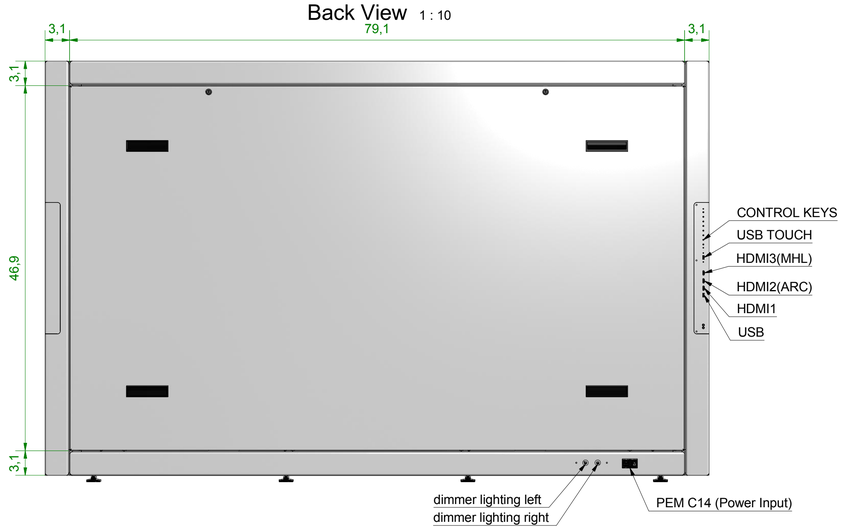

Top View 1 : 10

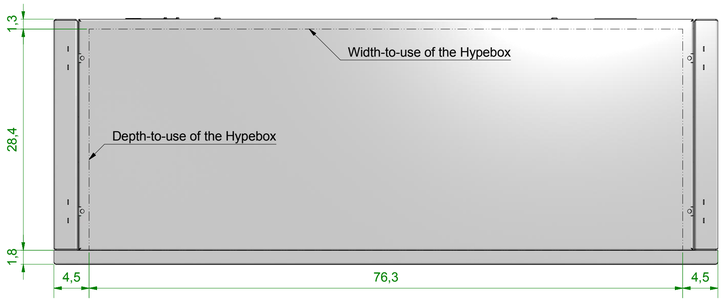

Isometric View 1 : 20 (Back Without Cover)

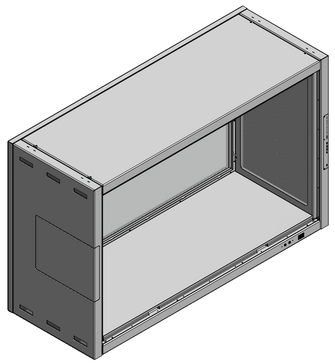

Isometric View 1 : 20 (Front)

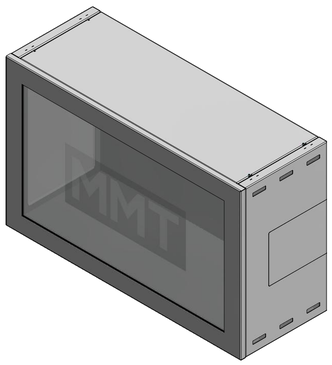

size (inch): 84"	product / model: Hypebox/HBT84L		MMT
drawing no.: Hypebox HBT84L G5	version: V1.1	revision:	MMT GmbH & Co. KG www.mmt.io
The copying, distribution and utilization of this document as well as the communication of it's contents to others without expressed authorization is prohibited. Offenders will be held liable for the payment of damages. All rights reserved in the event of the grant of a patent, utility model or ornamental design registration. (DIN 34)			constructed by: D. Lange; drawn by: D. Lange; checked by: D. Lange
			constructed on: 19.02.2016; drawn on: 23.02.2016; checked on: 25.02.2016
measures without tolerances: machined DIN ISO 2768 - m; non-machined DIN ISO 2768 - K; thermal cut DIN EN ISO 9013 - 1; welded DIN EN ISO 13920 - B			weight: 263 kg; scale: 1 : 10; format: A1; sheet: 1 / 1